BONEYARD CREEK - CHANNEL IMPROVEMENTS - FIRST ST. TO WRIGHT ST.

LAMAR SECTION

CITY OF CHAMPAIGN

Partial copy
Sheets 22
27
33
61
63
69
70

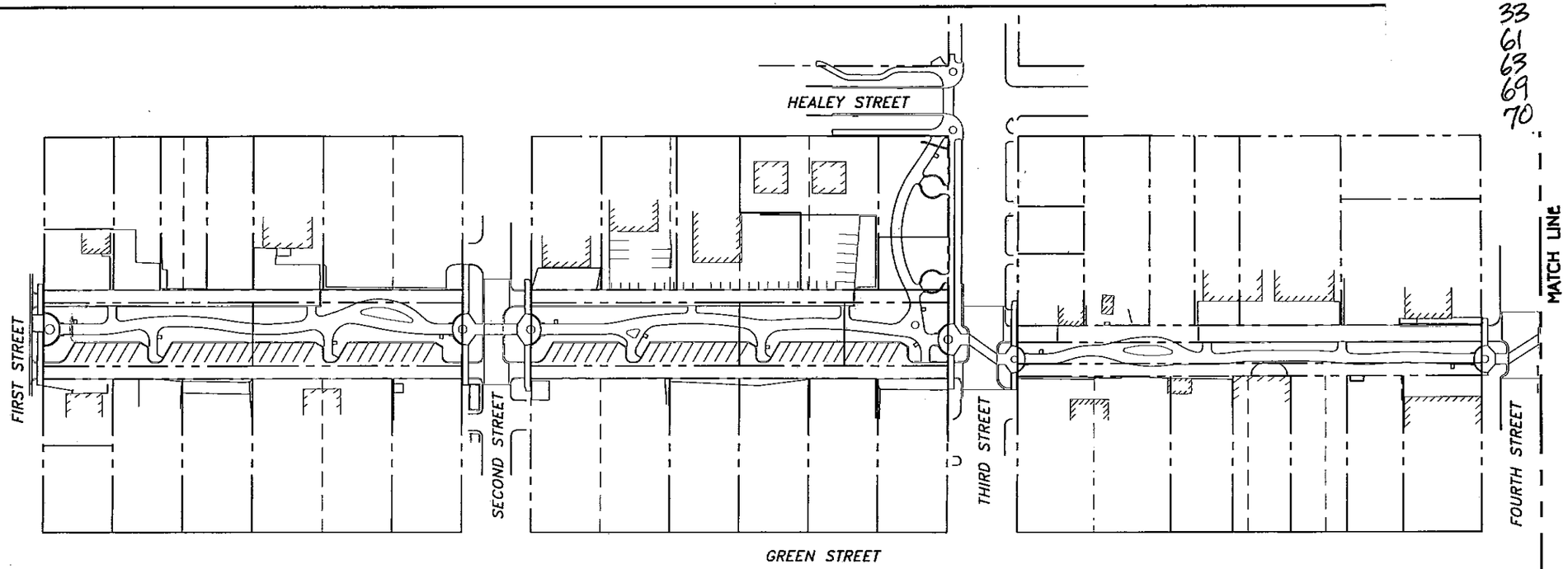

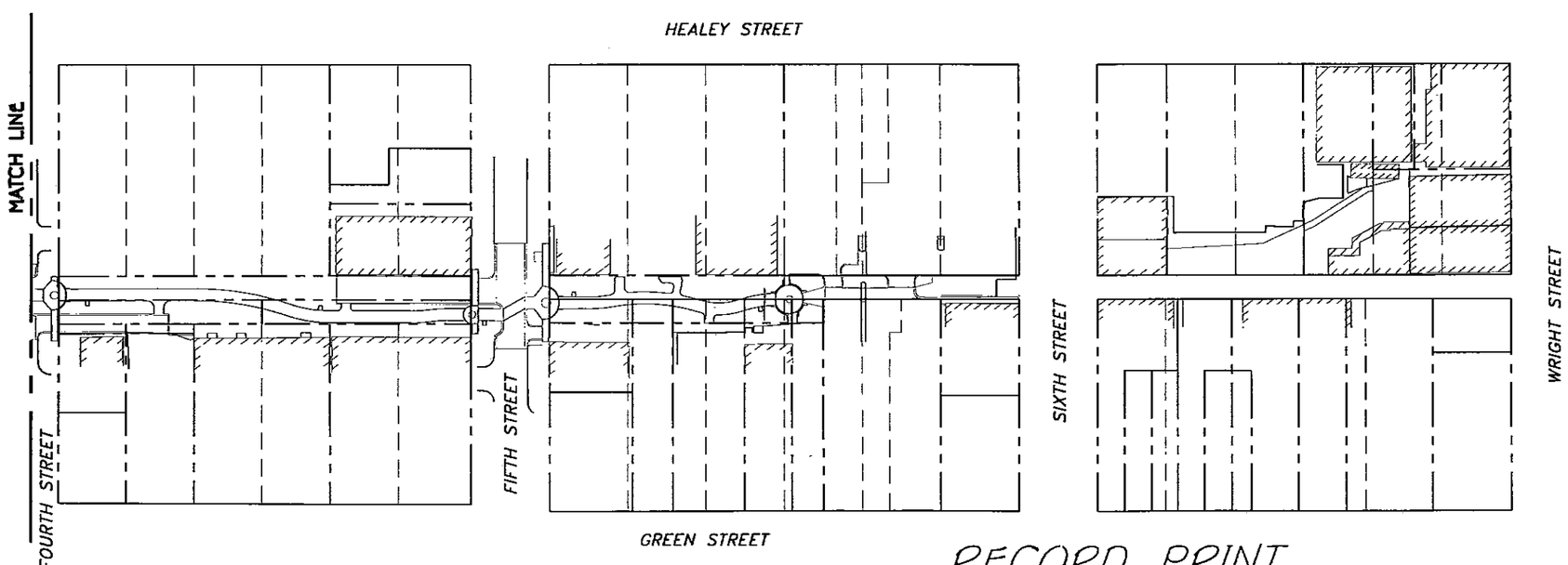

INDEX OF SHEETS

1	COVERSHEET
2	GENERAL NOTES & SUMMARY OF QUANTITIES
3-6	SCHEDULE OF QUANTITIES
7-9	TYPICAL SECTIONS AND DETAILS
10-12	BASELINES AND HORIZONTAL CONTROL
13	HORIZONTAL / VERTICAL CONTROL & LEGEND
14-15	EXISTING TOPOGRAPHY
16-21	DEMOLITION AND UTILITY RELOCATION PLAN
22	UTILITY DETAIL
23-28	PLAN & PROFILE - BONEYARD CREEK
29-33	PAVING AND GRADING PLAN
34	LIGHTING POLE DETAILS
35	ELECTRICAL CONTROL INSTALLATION DETAILS
36-38	LIGHTING PLANS
39-42	PUBLIC STREET PLAN
43-58	CROSS SECTIONS - BONEYARD CREEK
59-62	STRUCTURAL PLAN & PROFILE - BONEYARD CREEK
63	STRUCTURAL CROSS SECTIONS OF CHANNEL (PARKING LOT 'J' TO WRIGHT ST)
64-65	STANDARD STRUCTURAL DETAILS
66	SCOTT PARK DROP STRUCTURE - SITE PLAN
67	SCOTT PARK DROP STRUCTURE - PLANS, SECTIONS & ELEVATIONS
68	SCOTT PARK DROP STRUCTURE - ELEVATIONS, SECTIONS & DETAILS
69	PARKING LOT 'J' JUNCTION STRUCTURE - PLANS & SECTIONS
70	PARKING LOT 'J' JUNCTION STRUCTURE - PLANS, ELEVATIONS & SECTIONS
71	FLOW RESTRICTORS AT PARKING LOT 'J' AND WRIGHT STREET BRIDGE - PLANS, ELEVATIONS & SECTIONS
72-74	STORM SEWER DETAILS
75	STORM & SANITARY SEWER DETAILS
76-78	SOIL BORING LOGS
79-80	EROSION CONTROL - SCHEMATIC PLAN

N
0 60 120
scale feet

THOMAS B. JORDAN DATE
DIRECTOR OF LAND DEVELOPMENT
IL. PROFESSIONAL LAND
SURVEYOR NO. 2014

CITY ENGINEER DATE
CITY OF CHAMPAIGN

WOODROW C. CHENAULT, JR. DATE
LICENSED STRUCTURAL ENGINEER
ILLINOIS NO. 3567
STRUCTURAL
EXPIRES NOV. 30, 1999

JOHN A. DABROWSKI DATE
PROJECT DESIGN ENGINEER
LICENSED PROFESSIONAL ENGINEER
ILLINOIS NO. 42530
CIVIL
EXPIRES NOV. 30, 1999

THOMAS H. BURTNESS DATE
LICENSED PROFESSIONALL ENGINEER
ILLINOIS NO. 40946
ELECTRICAL
EXPIRES NOV. 30, 1999

MICHAEL J. MARTIN DATE
PRESIDENT
LAMAR, LLC
DEVELOPER

RECORD PRINT
OCTOBER 15, 1999

DATE OF PREPARATION: MAY 20, 1998

G:\LD\1350-50.TBJ\PLANS\COVERSHT.dwg

Prepared by: DAILY & ASSOCIATES, ENGINEERS, INC. CHAMPAIGN & PEORIA, ILLINOIS

Sheet 1 of 80
Job No. 1350.50

G:\LD\1350-50\PLANS\Coversht.dwg Wed Oct 13 16:01:47 1999 GAB

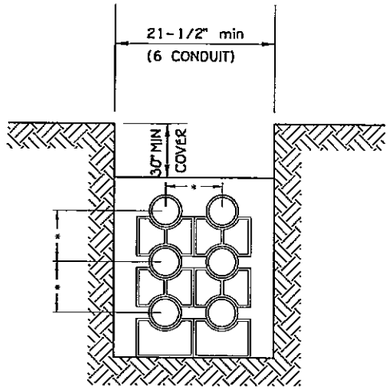

SECTION
CONCRETE ENCASEMENT OF UTILITY CONDUITS

COMBINATION OF 3", 4" AND 6" CONDUITS

1. USE CONDUIT SPACERS, MAX 5' O.C.
2. PROVIDE MIN. 3" CONC. AROUND OUTSIDE OF CONDUITS.
3. PROVIDE ± 2" CLEAR BETWEEN CONDUITS.
4. BRACE CONDUITS DOWN TO PREVENT FLOATING IN WET CONCRETE.

* 8-1/2" - (6" CONDUIT)
6" - (4" CONDUIT)
5" - (3" CONDUIT)

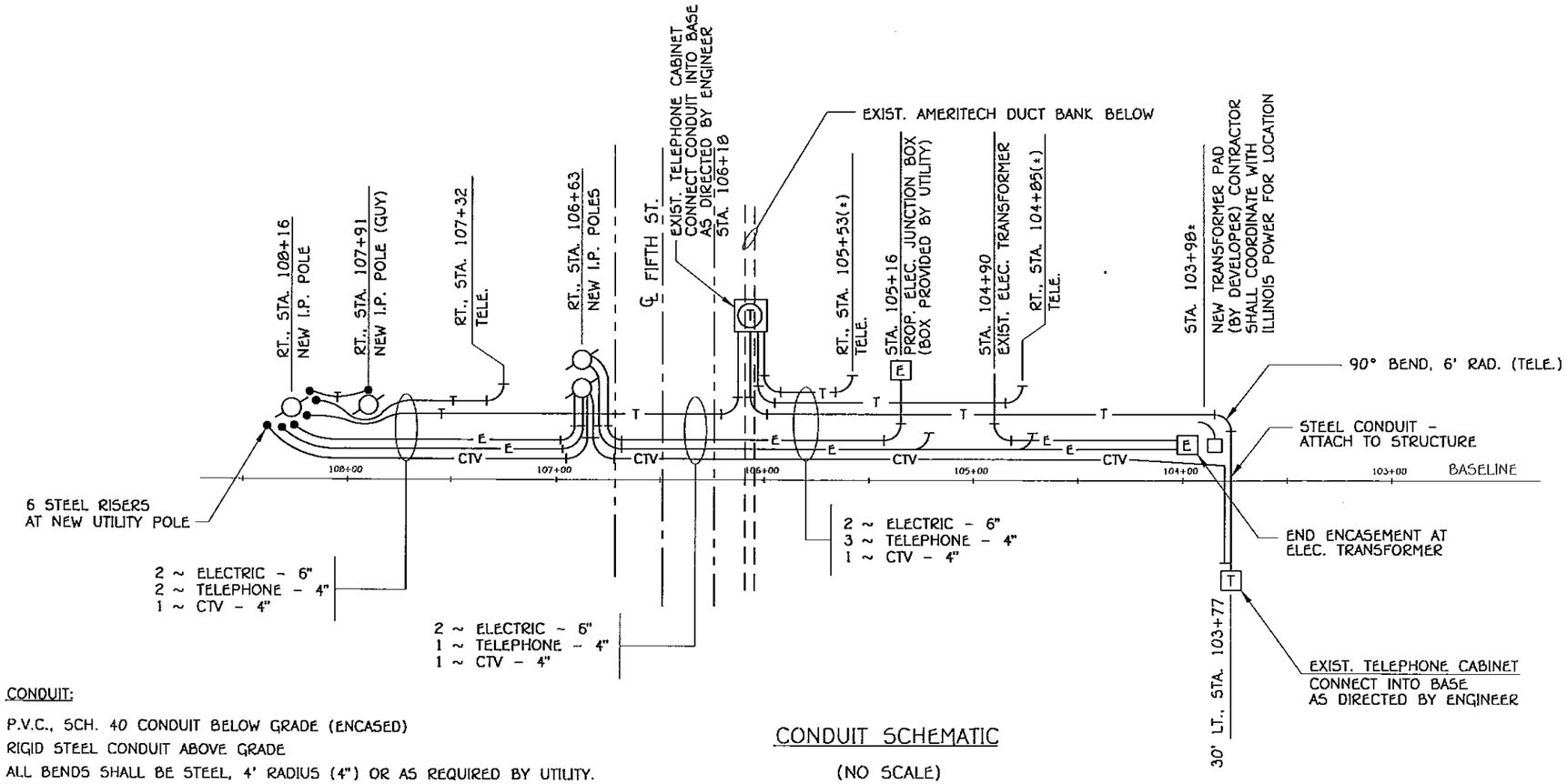

CONDUIT:

P.V.C., SCH. 40 CONDUIT BELOW GRADE (ENCASED)

RIGID STEEL CONDUIT ABOVE GRADE

ALL BENDS SHALL BE STEEL, 4' RADIUS (4") OR AS REQUIRED BY UTILITY.

STATIONING IS APPROXIMATE - EXACT LOCATION TO BE COORDINATED WITH UTILITY COMPANY.

CONSTRUCT STEEL RISERS AT UTILITY POLE TO NOT LESS THAN 8' ABOVE GRADE, UNLESS OTHERWISE NOTED.

TELEPHONE CONDUIT SWEEP AT POLE SHOULD EXTEND 4" ABOVE GRADE.

PULL STRING ON WIRE SHALL BE INSTALLED IN EVERY CONDUIT.

CONDUIT SCHEMATIC

(NO SCALE)

——— T ——— AMERITECH TELEPHONE
——— E ——— ILLINOIS POWER - ELECTRIC
——— CTV ——— TIME WARNER CABLE TELEVISION

UNDERGROUND UTILITY CONDUITS
DEVELOPER PROVIDED

NOTE: AS BUILT INFORMATION THIS SHEET IS FROM CONSTRUCTION INFORMATION PROVIDED BY THE CITY OF CHAMPAIGN CONSTRUCTION OBSERVATION PERSONNEL.

DRAWN BY: WKH	DESIGNED BY: CHK'D BY:	REVISIONS:	RECORD PRINT OCTOBER 15, 1999
DATE: 5-20-98	APPROVED BY:		
PROJ. NAME: BONEYARD CREEK	DWG: G:\LD\1350-50.TBJ\PLANS\UTIL-DET.dwg		

Prepared by: DAILY & ASSOCIATES, ENGINEERS, INC. CHAMPAIGN & PEORIA, ILLINOIS

BONEYARD CREEK CHANNEL IMPROVEMENTS 1st TO WRIGHT STREET

UTILITY DETAILS

SHEET 22 OF 80

JOB NO. 1350.50

G:\LD\1350-50\ 3\Util-det.dwg Wed Oct 13 16:09:41 1999 GAB

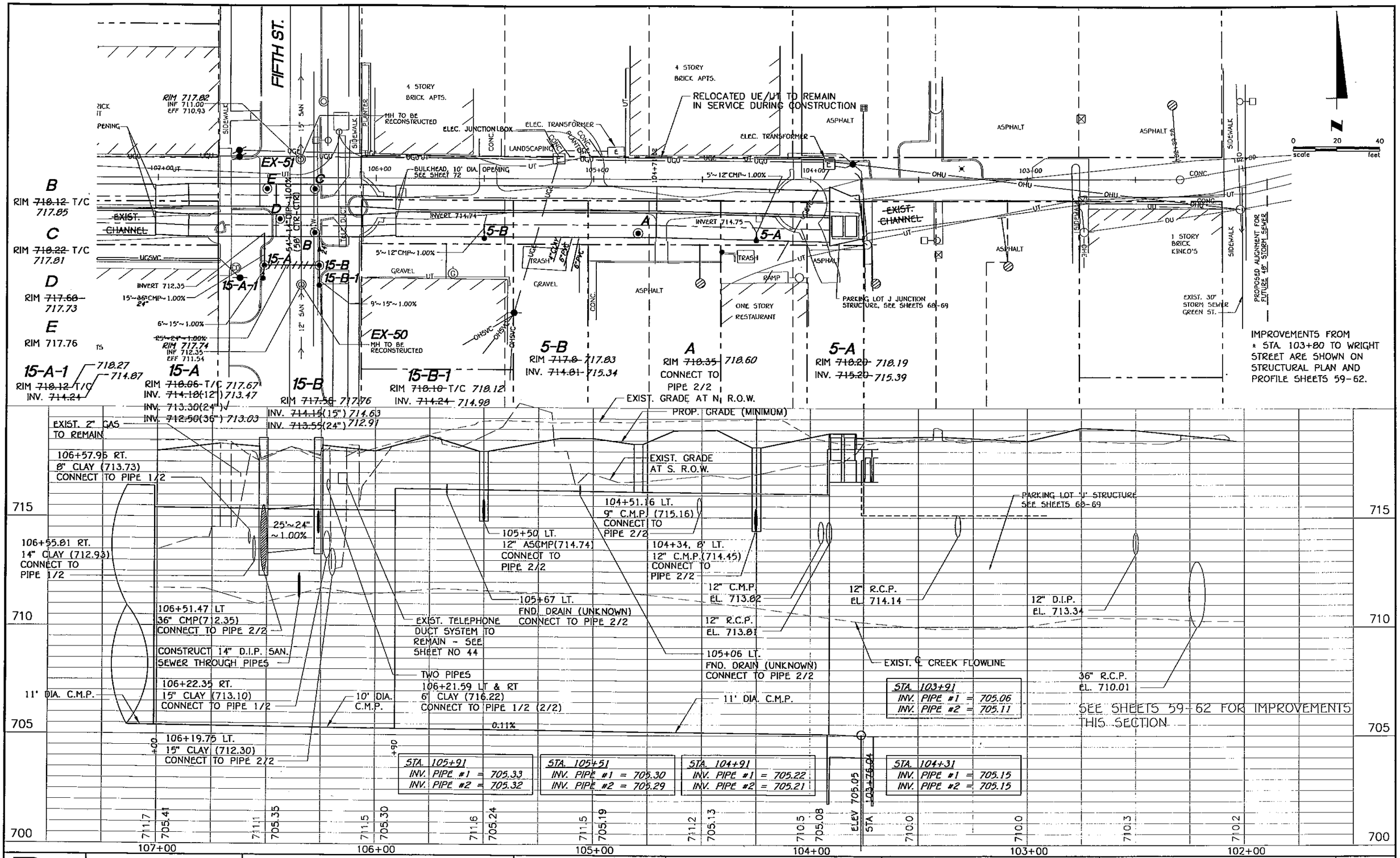

DRAWN BY: GAB DATE: 5-20-98 PROJ. NAME: BONEYARD CREEK	DESIGNED BY: CHK'D BY: APPROVED BY: DWG: G:\LD\1350-50.TBJ\DWG\GBP02005.dwg	REVISIONS:	RECORD PRINT OCTOBER 15, 1999	BONEYARD CREEK CHANNEL IMPROVEMENTS 1st TO WRIGHT STREET	PLAN & PROFILE BONEYARD CREEK

Prepared by: DAILY & ASSOCIATES, ENGINEERS, INC. CHAMPAIGN & PEORIA, ILLINOIS

SHEET 27 OF 80

JOB NO. 1350.50

G:\LD\1350-50\GBP02005.dwg Wed Oct 13 16:13:13 1999 GAB

NOTE: SEE SHEET 9 FOR TYPICAL WALK AND ALLEY PAVEMENT DETAILS

NOTE: MAINTAIN SHEET FLOW DRAINAGE FROM OFF SITE. ADJUST PLAN GRADES AS DESIGNATED BY THE ENGINEER.

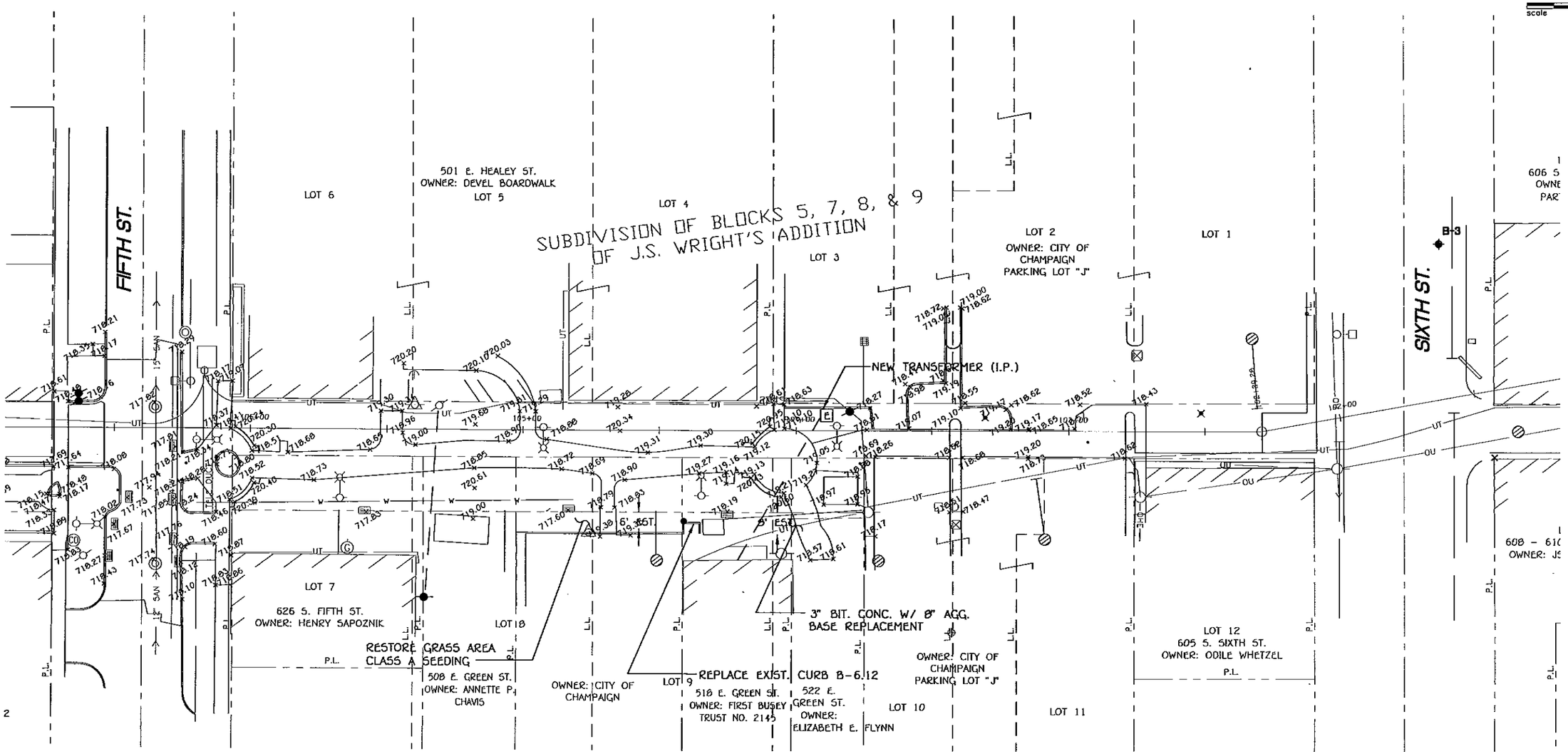

LANDSCAPE IMPROVEMENTS NOT SHOWN. SEE LANDSCAPE PLANS BY OTHERS.

NOTE: PAVING IMPROVEMENTS END AT SIXTH STREET. SEE SHEETS 59 TO 62 FOR IMPROVEMENTS BETWEEN SIXTH STREET AND WRIGHT STREET.

G:\LD\1350-50\ S\AS-BUILT\Paving.dwg Wed Oct 13 16:17:50 1999 GAB

DRAWN BY: GAB/WKH DATE: 5-20-98 PROJ. NAME: BONEYARD CREEK	DESIGNED BY: WHD CHK'D BY: APPROVED BY: DWG: G:\LD\1350-50.TBJ\PLANS\AS-BUILT\PAVING.dwg	REVISIONS:	RECORD PRINT OCTOBER 15, 1999	BONEYARD CREEK CHANNEL IMPROVEMENTS 1st TO WRIGHT STREET	PAVING AND GRADING PLAN

Prepared by: DAILY & ASSOCIATES, ENGINEERS, INC. CHAMPAIGN & PEORIA, ILLINOIS

SHEET 33 OF 80

JOB NO. 1350.50

NOTE:
COORDINATE BASELINE AND HORIZONTAL CONTROL WITH SHEET 12

PARKING LOT 'J' JUNCTION STRUCTURE
PARKING LOT 'J'
STA 103+77 9.4' LT
STRUCTURE WITH EXISTING SHEET PILE SIDES AND CONCRETE CAP WITH 18" PRECAST DECK BEAM TOP
STA 102+29.28 0.00 RT
PROPOSED SURVEY BASELINE
SIXTH ST BRIDGE
℄ SIXTH ST
B-3
OUTLINE OF EXISTING UNDERLYING STRUCTURE BELOW GREEK TABLE RESTAURANT
1'-8" x 11' x 5' CONCRETE SHIELD WALL TO BE REMOVED
EXISTING STACKED CONCRETE WALL
TOP OF PROPOSED SHT PILING ELEV 716±
STREAMSIDE FACE NORTH BANK PILING STA 100+83 2.1' RT
U OF I PARKING LOT
STA 99+55 4.2 RT PILING CONTROL PT.
PROPOSED 6' CHAIN LINK FENCE
8' GATE
EXISTING SHEET PILING
FILL BETWEEN SHEET PILING AND WALL
PILING CONTROL PT STA 99+99 7.3' LT
CONCRETE CAP
TOP OF PROPOSED SHEET PILING ELEV ~~719±~~ 713.0±
SLOPED TRANSITION
TOP OF PROPOSED SHEET PILING ELEV ~~717±~~ 713.0±
PILING CONTROL PT STA 99+05 24.8' RT
TOP OF PROPOSED SHEET PILING ELEV ~~717±~~ 717.1±
STA 99+03 7.1' RT PILING CONTROL PT
PROPOSED FLOW RESTRICTOR
STA 103+75 26.6' LT
STA 101+76.19 0.00 RT
STA 100+85 10.7' LT
STREAMSIDE FACE SOUTH BANK PILING PILING AGAINST EXISTING FOOTING
TOP OF PROPOSED PILING CAP
PROPOSED FLOWLINE
STA 97+86 27.0' LT PILING CONTROL POINT
FILL AND SURFACE WITH CONCRETE SLOPEWALL
16' MIN AND VARIES
TOP OF PROPOSED PILING CAP ELEV ~~711.5±~~ 713.1±
PROVIDE CHAIN LINK FENCE FROM END OF GUARD RAIL TO EXISTING CHAIN LINK
NOT CONSTRUCTED AS OF 10-15-99
GARBER ST

NOTE:
CONTRACTOR MAY REMOVE EXISTING CONCRETE DECK BEAMS AT PARKING LOT 'J' STRUCTURE FOR CHANNEL EXCAVATION WORK AND CONCRETE BASE SLAB INSTALLATION. PROVIDE TEMPORARY BRACING AT EXISTING CONCRETE CAP BEAM AT 10' MAX SPACING (MIN CAPACITY = 32,000 LBS).

NOTE:
SEE SHEETS 68 AND 69 FOR PARKING LOT 'J' JUNCTION STRUCTURE

IMPROVEMENTS NOT CONSTRUCTED AS OF 10-15-99

NOTE:
AT CONTRACTORS OPTION, PILING ANGLE CHANGES AT CONTROL POINTS MAY BE ACCOMPLISHED USING MAX 10° SWING PER INDIVIDUAL PILE SECTION, OR BY USING PREFABRICATED CORNERS. IF PREFABRICATED CORNERS ARE USED, CONTROL POINTS MAY BE ADJUSTED SLIGHTLY TO ALLOW WHOLE NUMBERS OF SHEETS TO BE INSTALLED.

NOTE:
SEE SHEET 63 FOR SECTIONS INDICATED

STREAMSIDE FACE OF SHEET PILES USED FOR STATIONING OF CONTROL POINTS

FIELD VERIFY STATIONS AND OFFSETS SHOWN FOR SHEET PILING LOCATIONS

BONEYARD CREEK SOUTH BANK PROFILE

0 20 40 scale feet

EXISTING PARKING LOT 'J' STRUCTURE | EXISTING SIXTH ST BRIDGE | EXISTING GREEK TABLE RESTAURANT | EXISTING CONCRETE RETAINING WALL | EXISTING SLOPED BANK

TOP OF GRATE 718.94
PROPOSED FLOW RESTRICTOR SEE SHEET 71
PROPOSED ACCESS RESTRICTOR
EXISTING FLOWLINE
ELEV. ~~705.0±~~ 705.01
PROPOSED FLOWLINE
BASE SLAB
STA 103+91
STA 103+75
STA 102+16
STA 101+42
STA 100+83
ELEV. 696.0±
EXISTING PARKING LOT 'J' SHEET PILING
ELEV. 711.7±
ELEV ~~704.0±~~
ELEV. 703.0±
PROPOSED UNDERPINNING (SEE SHEET 65)
EXISTING TIMBER PILES AT 4' CENTERS±
12" MIN CONCRETE SLAB STRUT
ELEV. ~~704.7±~~
PROPOSED CONCRETE CAP (SEE SHEET 64)
EXISTING BUILDINGS NOT SHOWN FOR CLARITY
PROPOSED SHEET PILING RETAINING WALL
PROPOSED 6" CONCRETE SLOPEWALL
EXISTING FLOWLINE (EST)
PROPOSED FLOWLINE/ TOP OF CONCRETE SLAB STRUT WHERE APPLIED
ELEV. 691±

720 715 710 705 700 695 690

104+00 103+00 102+00 101+00 100+00 99+00

DRAWN BY: MRF/GAB DATE: 5-20-98 PROJ. NAME: BONEYARD CREEK	DESIGNED BY: SBM/WHD CHK'D BY: SBM APPROVED BY: WCC DWG: G:\LD\1350-50.TBJ\PLANS\PLNPRF.dwg	REVISIONS:	RECORD PRINT OCTOBER 15, 1999	BONEYARD CREEK CHANNEL IMPROVEMENTS 1st TO WRIGHT STREET	STRUCTURAL PLAN AND SOUTH BANK PROFILE STA 100+00 TO 104+00 BONEYARD CREEK	SHEET 61 OF 80 JOB NO. 1350.50

Prepared by: DAILY & ASSOCIATES, ENGINEERS, INC. CHAMPAIGN & PEORIA, ILLINOIS

G:\LD\1350-50\ :\Plnprf.dwg Thu Oct 14 11:42:11 1999 GAB

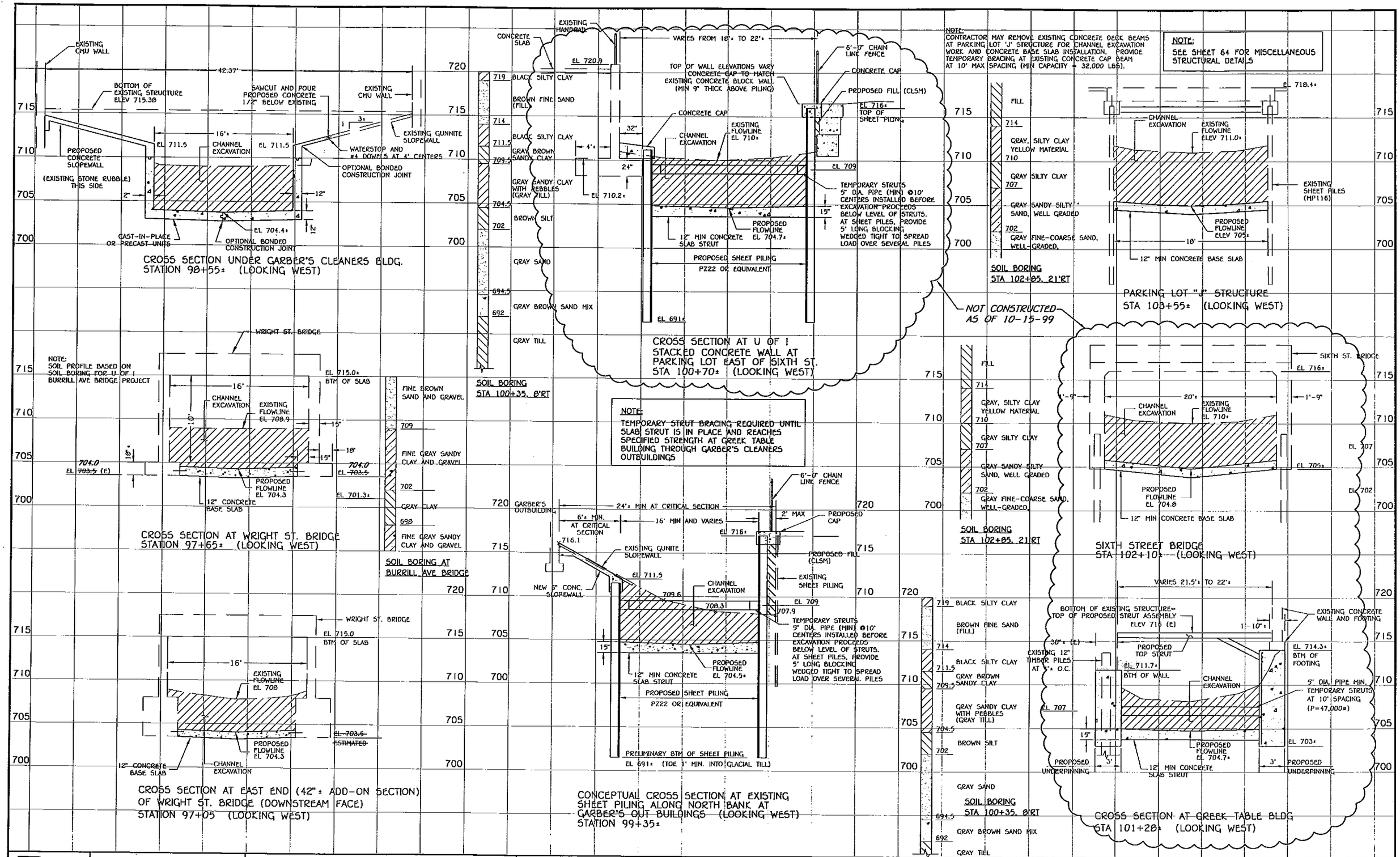

G:\LD\1350-50\ S\SECT01R3.DWG Thu Oct 14 14:03:04 1999 GAB

DRAWN BY: MRF	DESIGNED BY: SBM	CHK'D BY: WCC	REVISIONS:
DATE: 5-20-98	APPROVED BY:		
PROJ. NAME: BONEYARD CREEK	DWG: G:\LD\1350-50.TBJ\PLANS\SECT01R3.dwg		

Prepared by: **DAILY & ASSOCIATES, ENGINEERS, INC.** CHAMPAIGN & PEORIA, ILLINOIS

RECORD PRINT
OCTOBER 15, 1999

BONEYARD CREEK CHANNEL IMPROVEMENTS 1st TO WRIGHT STREET

STRUCTURAL CROSS SECTIONS OF CHANNEL PARKING LOT "J" TO WRIGHT ST.

SHEET 63 OF 80

JOB NO. 1350.50

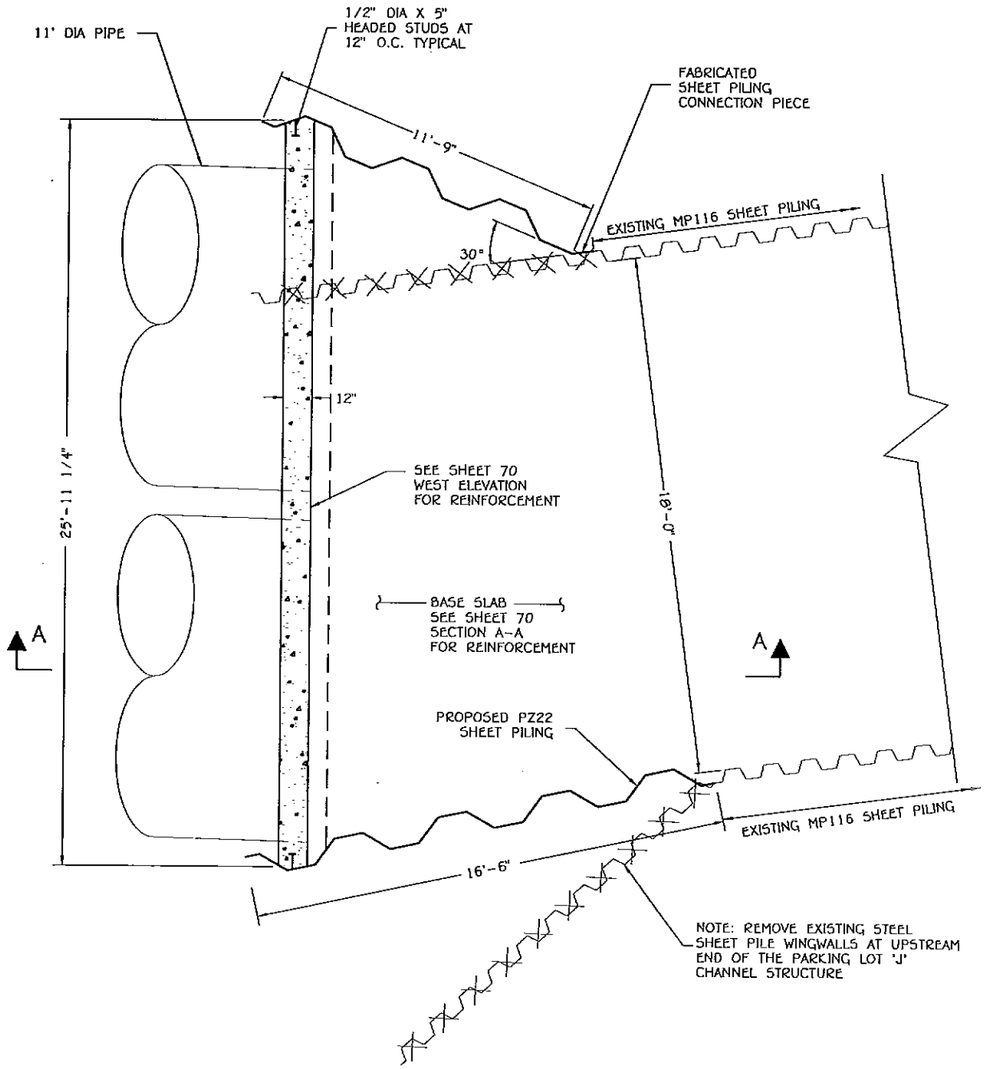

PLAN - BASE SLAB

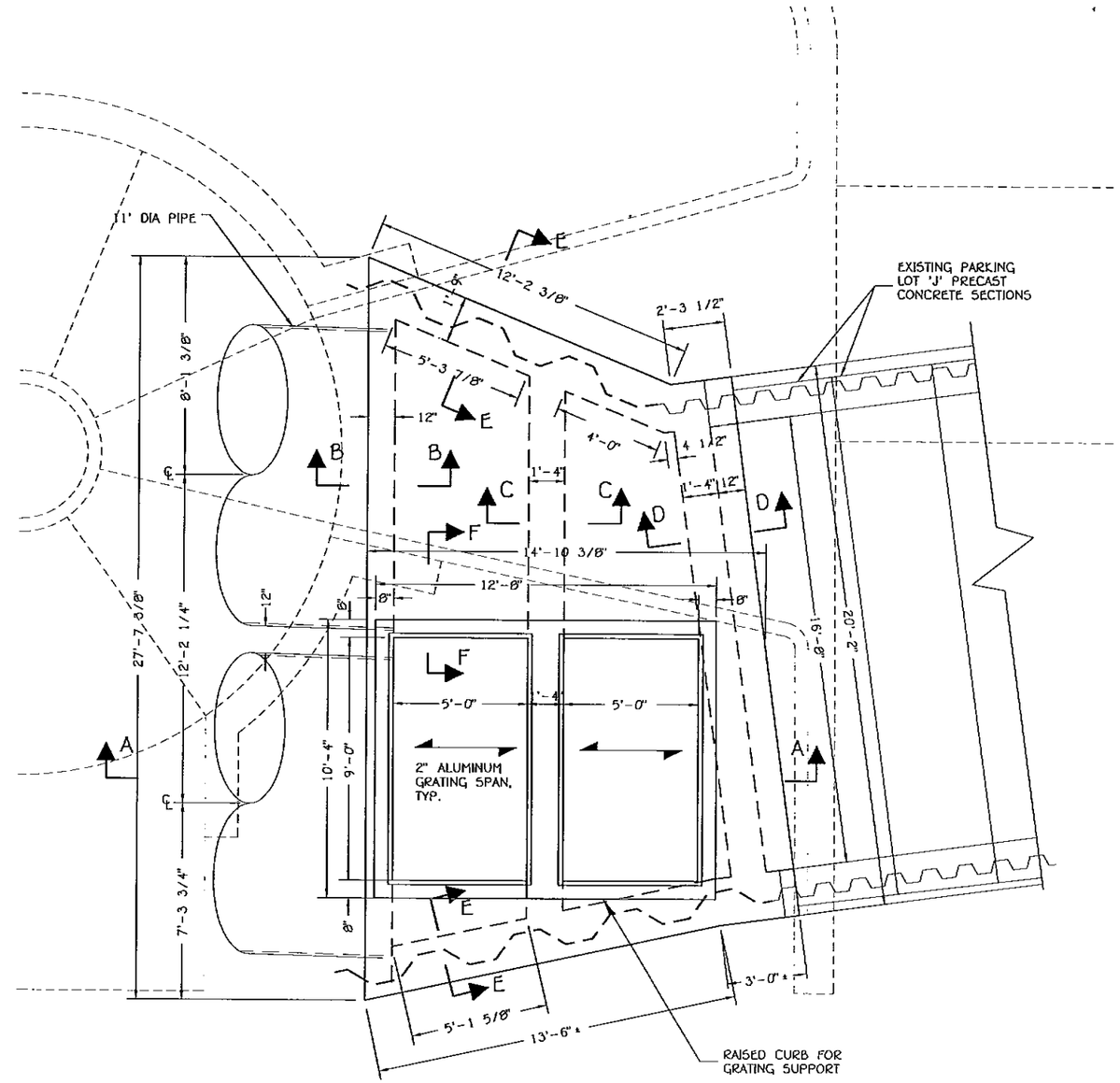

PLAN - TOP SLAB

N

0 3 6
scale feet

DRAWN BY: MRF	DESIGNED BY: SBM CHK'D BY: SBM	REVISIONS:	
DATE: 5-20-98	APPROVED BY: WCC		
PROJ. NAME: BONEYARD CREEK	DWG: G:\LD\1350-50.TBJ\PLANS\PKLOTJ.dwg		

Prepared by: **DAILY & ASSOCIATES, ENGINEERS, INC.** CHAMPAIGN & PEORIA, ILLINOIS

BONEYARD CREEK CHANNEL IMPROVEMENTS 1st TO WRIGHT STREET

PARKING LOT 'J' JUNCTION STRUCTURE PLANS

SHEET 69 OF 80

JOB NO. 1350.50

G:\LD\1350-50 S\Pklotj.dwg Wed Oct 13 16:44:24 1999 GAB

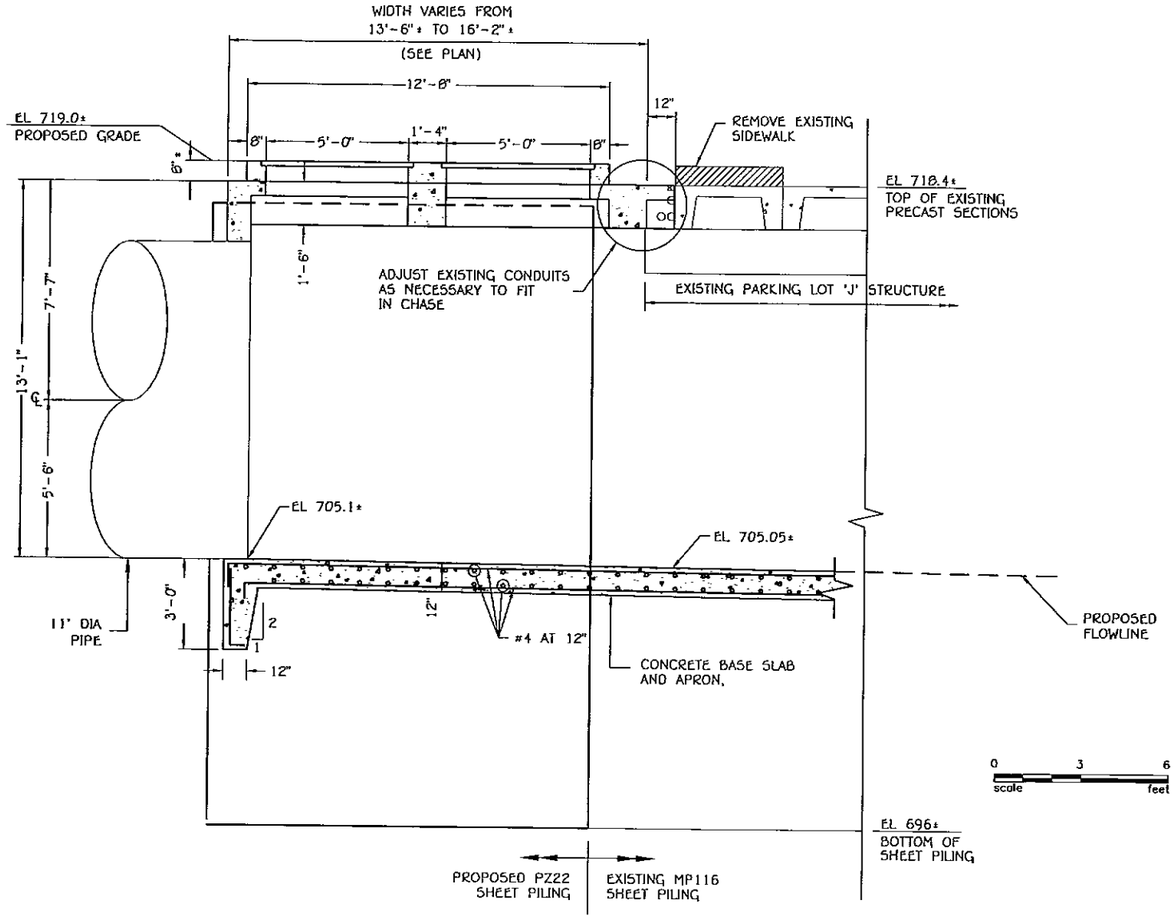

SECTION A-A
(LOOKING NORTH)

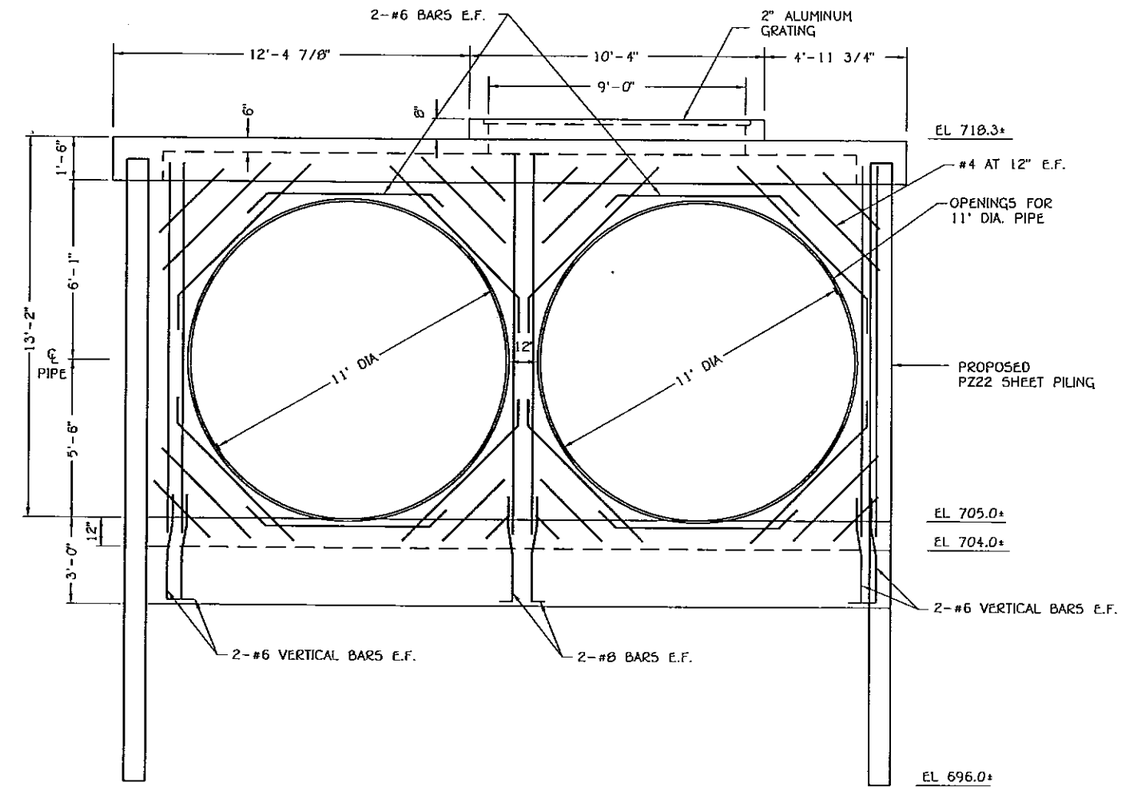

WEST ELEVATION

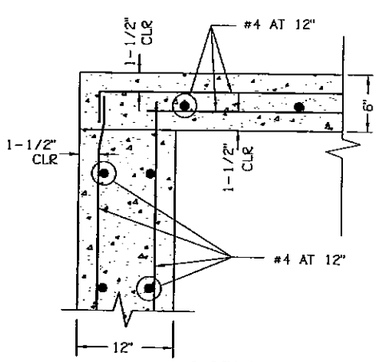

SECTION B-B
NO SCALE

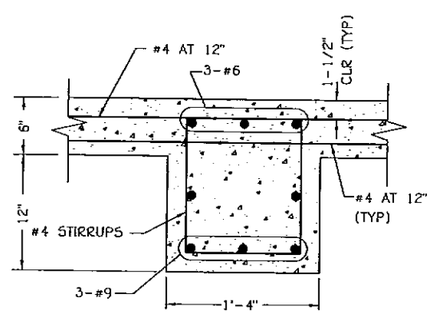

SECTION C-C
NO SCALE

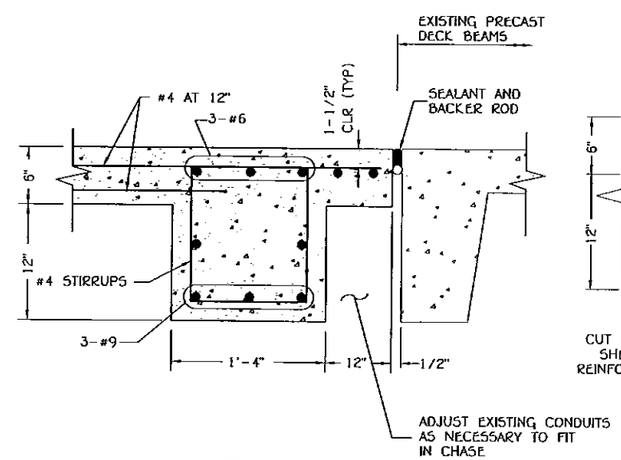

SECTION D-D
NO SCALE

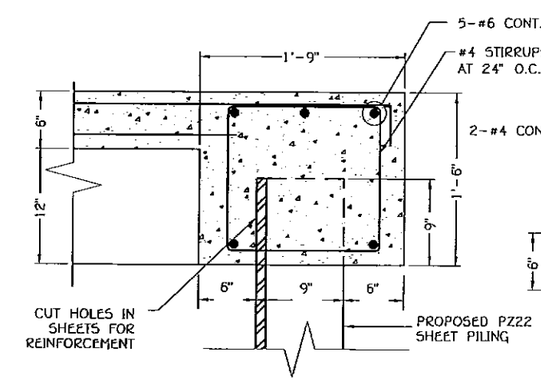

SECTION E-E
NO SCALE

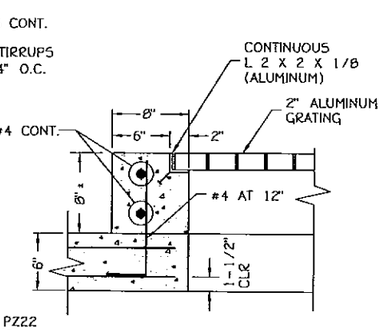

SECTION F-F
NO SCALE

DRAWN BY: MRF	DESIGNED BY: SBM CHK'D BY: SBM	REVISIONS:	
DATE: 5-20-98	APPROVED BY: WCC		
PROJ. NAME: BONEYARD CREEK	DWG: G:\LD\1350-50.TBJ\PLANS\PKLOTJ.dwg		

Prepared by: **DAILY & ASSOCIATES, ENGINEERS, INC.** CHAMPAIGN & PEORIA, ILLINOIS

BONEYARD CREEK
CHANNEL IMPROVEMENTS
1st TO WRIGHT STREET

PARKING LOT 'J'
JUNCTION STRUCTURE
SECTIONS, ELEVATION

SHEET 70 OF 80

JOB NO. 1350.50

G:\LD\1350-50 jS\Pklotj.dwg Wed Oct 13 16:44:17 1999 GAB