SANITARY SEWER STANDARDS

URBANA & CHAMPAIGN SANITARY DISTRICT

AND

AFFILIATED COMMUNITIES

CHAMPAIGN

URBANA

SAVOY

Prepared by:

Intergovernmental
Joint Sanitary Sewer Technical Committee
July 2016

Introduction

The Intergovernmental Agreement Regarding Sanitary Sewers, which was adopted in 1992 by the Urbana & Champaign Sanitary District (District), the City of Champaign, City of Urbana and Village of Savoy, provided for the creation of a Sanitary Sewer Technical Committee charged with the responsibility of coordinating and implementing certain responsibilities set forth in that Agreement. One of those responsibilities is to control connections to, and set standards for construction of, all municipal sanitary sewer systems tributary to the District. To that end, the Technical Committee adopted a set of standards in December, 1994.

This document represents the latest revision to those 1994 standards, incorporating policy and technical changes that expand and clarify the practices and requirements that apply to all sanitary sewers within the District.

It is the Sanitary Sewer Technical Committee's intent through these standards that it is clear to the development, architectural, and engineering community what the District and each community's standards are. This will result in consistent plan and specification submittals and simplify installation methods and expectations for contractors.

Urbana & Champaign Sanitary District

By: _____
Executive Director

City of Urbana, Illinois

By: _____
Public Works Director

City of Champaign, Illinois

By: _____
City Engineer

Village of Savoy, Illinois

By: _____
Public Works Director

SANITARY SEWER STANDARDS

100.00 PIPE MATERIALS

Pipe materials used for sanitary sewers shall conform to the following materials which are expressly manufactured for transmitting sanitary sewage and shall comply with requirements of the Illinois Environmental Protection Agency:

SDR 26(minimum thickness) Solid Wall PVC pipe per ASTM D-3034 (4-inch through15-inch), SDR 26 (minimum thickness) Solid Wall PVC pipe per ASTM DF679 (18-inch through 60-inch), PVC profile pipe (18-inch diameter and larger) per ASTM F949 or ASTM 1803, centrifugally-cast fiberglass-reinforced polymer mortar pipe per ASTM D3262 (18-inch through 60-inch), ductile iron per AWWA C150, and others approved by the Executive Director of the UCSD with the concurrence of the approving authority.

Ductile iron pipe shall have an interior coating to protect against corrosion consisting of Protecto 401 ceramic epoxy or polyethylene lining. Interior coating shall have a nominal thickness of 40 mils. Polyethylene lining shall be in accordance with ASTM D1248 and be heat fused. For trenchless construction, materials and methods will be approved on a case-by-case basis by the approving authority.

110.0 MANHOLES

Manholes shall comply with minimum standards in the "STANDARD SPECIFICATIONS FOR WATER AND SEWER MAIN CONSTRUCTION IN ILLINOIS latest edition" and shall be a minimum of 48 inches in diameter. An external manhole chimney seal shall be required on all new manholes.

111.0 DROP MANHOLE CONNECTIONS

All new drop manholes shall be a minimum of 5 foot diameter. Drop manhole installations, for 8" collector sewers and service lines connecting to 5 foot or greater diameter manholes, shall be installed as internal to the manhole structure. Drop connections to existing manholes less than 5 foot diameter shall be external and shall comply with the appropriate provisions and details in the "STANDARD SPECIFICATIONS FOR WATER AND SEWER MAIN CONSTRUCTION IN ILLINOIS, latest edition". A minimum of a five-foot diameter manhole shall be required for internal drop assemblies. Internal drop assembly shall be a RELINER® drop bowl system or engineer approved equal. The drop bowl system shall include a drop bowl assembly, pipe clamps, pipe, and pipe fittings. Pipe and pipe fittings shall be SDR 26 PVC pipe in accordance with Section 100. Drop bowl system shall be installed in accordance with manufacturer's recommendations. Drop connections over 8" in diameter may be internal or external as determined by the approving authority. The location and details of proposed internal drop assemblies must be approved by the approving authority prior to initiation of construction.

If laterals are constructed of 6-inch pipe, they shall have a minimum slope of 1/8-inch per foot. 4-inch pipe shall have a minimum slope of ¼-inch per foot. All laterals shall be installed at a depth to serve the building it is designed to serve, but shall have a minimum cover of 42-inches unless otherwise approved on a case-by-case basis by the approving authority.

The end of the pipe shall be at no deeper than 7 feet below the existing grade and shall be staked with a 2 x 4 wood leader which extends to 1-ft above the ground.

Manholes are required on any service lateral that that exceeds 6-inches in inside diameter. Manholes shall comply with section 110.00

VAC-A-TEE® by LMK shall be acceptable for clean-outs on sewer lateral lines.

Each service connection shall be installed to the property line and shall be installed no closer than five-feet to any property corner.

124.00 PIPEBURSTING SEWER LATERAL REPLACEMENT

1. CONTRACTOR'S QUALIFICATIONS

The Contractor shall be trained and certified by manufacturer of the pipe bursting system. A copy of the contractor's certification and training records shall be submitted to approving authority.

Field joining of HDPE pipe shall be performed by competent personnel trained in the use of butt-fusion equipment and recommended methods for new pipe connections. Personnel directly involved with installing the new pipe shall receive training in the proper methods for handling and installing the HDPE pipe. All training shall be performed by a qualified representative of the manufacturer.

2. MATERIALS

Polyethylene Plastic Pipe shall be high-density polyethylene pipe and meet the applicable requirements of ASTM F714 Polyethylene (PE) Plastic Pipe (SDR-PR) Based on Outside Diameter, ASTM D1248, ASTM D3550.

All pipe installed shall be the same diameter or larger than the original sewer lateral and offer the same flow capacity. All pipe shall be made of virgin material. The pipe shall be homogenous throughout and shall be free of visible cracks, holes, foreign material, blisters, or other deleterious faults.

The minimum wall thickness of the polyethylene pipe shall be SDR-17. Minimum inside diameter shall be 4-inches.

All defective joints shall be cut out and replaced at no additional cost. Any section of the pipe with a gash, blister, abrasion, nick, scar, or other deleterious fault greater in depth than ten percent (10%) of the wall thickness, shall not be used and must be removed from the site. However, a defective area of the pipe may be cut out and the joint fused in accordance with the procedures stated above. In addition, any section of the pipe having other defects such as concentrated ridges, discoloration, excessive spot roughness, pitting, variable wall thickness or any other defect of manufacturing or handling shall be discarded and not used.

The ends of the HDPE shall be connected to existing or new pipes using a coupling device. The new connection shall not compromise the structural stability or previous rehabilitation efforts in the mainline sewer serving the lateral. A Fernco Stock or Mission Standard coupling are acceptable for coupling the new HDPE to existing clay, concrete, or cast iron pipe for buried applications. Mission or Fernco couplings shall have rubber sleeves that conform to ASTM C 425 and ASTM C 1173 with 316 Series stainless steel clamps with nut and bolt or worm drive take-up. A bag of premixed concrete shall be installed under each Mission or Fernco coupling.

An ISCO Standard Coupling to IPS PVC or Poly-Cam Transition Coupling shall be used for coupling the new HDPE pipe to PVC pipe.

After all connections are made and inspected by the approving authority, the access pits shall be backfilled.

5. INSPECTION

The Contractor shall provide internal pipe televising inspection for the sewer lateral prior to the pipe bursting activities and after the pipe bursting activities have been completed. A copy of the internal pipe televising inspection shall be available to the approving authority for their review for a period of 3 years after the installation is completed. Televising videos shall be in a MPEG-2 digital video format and shall be stored on CD or DVD discs. Discs shall be clearly labeled with the address of the installation, date performed, and contractor performing the work.

All pipe connections made must be inspected prior to backfilling and resurfacing.

125.0 CURED-IN-PLACE SANITARY LATERAL LINING STANDARDS

1. CONTRACTOR'S QUALIFICATIONS

The Contractor shall be trained and certified by manufacturer of the cured-in-place sanitary sewer lateral lining system. A copy of the contractor's certification and training records shall be submitted to approving authority.

The "wet out" tube shall be inserted through an access point by means of an inversion process and the application of air pressure or hydrostatic head sufficient to fully extend it to the public sanitary sewer. The tube shall be inserted into the inversion standpipe with the impermeable plastic membrane side out. At the other end of the inversion standpipe, it shall be turned inside out. The inversion head shall be adjusted to provide sufficient pressure or height to cause the impregnated tube to invert from and hold the tube tight to the pipe wall. Care shall be taken during the inversion so as not to over-stress the felt fiber.

The use of lubricant is required during the inversion procedure. The methods and materials used for lubrication shall be in accordance with ASTM F 1216, Section 7.5.

Before inversion begins, the Contractor shall obtain from the manufacturer the minimum pressure required to hold the tube tight against the existing conduit and the maximum allowable pressure so as to not damage the tube. Once the inversion process begins, the Contractor shall maintain the pressure between the minimum and maximum pressure until the completion of the inversion process. If the pressure deviates beyond the limits of the minimum and maximum pressures, the Contractor shall remove the installed tube from the existing conduit.

The Contractor shall perform the curing of the inverted tube in accordance with ASTM F 1216, Section 7.6.

Initial cure shall be deemed to be completed when inspection of the exposed portions appear to be hard and sound or the remote temperature sensor indicates that the temperature is of a magnitude to realize an exotherm or cure in the resin. The cure period shall be of a duration recommended by the resin manufacturer, as modified for the process, during which time the recirculation of the water and cycling of the heat exchanger continues to maintain the temperature.

Steam curing is allowed and shall follow Section 7.6.2 and Section 7.6.3 of ASTM F1216.

The finished liner shall be continuous over the entire length of an inversion run and be as free as commercially practicable from visual defects such as foreign inclusions, dry spots, pinholes and delaminations.

After sewer lateral cured-in-place sewer lining is completed and inspected by the approving authority, the access pit shall be backfilled.

All pipe connections made must be inspected prior to backfilling and resurfacing.

4. CONNECTION TO PUBLIC SEWER

LMT™ (Lined Main Tap™) Saddle by LMK or Engineer approved equal shall be used for all connections to existing clay sewer pipes that have been rehabilitated using the cured-in-place sewer lining technology. Kor-N-Tee Lateral Pipe Connectors by NPK or Engineer approved equal shall be used for all connections to existing concrete sewer pipes that have been rehabilitated using the cured-in-place sewer lining technology.

Kor-N-Tee Lateral Pipe Connectors or LMT™ Saddle shall be properly supported in a granular base to minimize settlement.

143.00 PIPE COUPLINGS

Pipe couplings shall be non-shear type and conform to the applicable portions of ASTM C-425, C-443, C-564, C-1173, D-5926 and D-1869. Pipe couplings shall be Fernco 5000 Series Strong Back Couplings or Engineer approved equal. They shall be made of elastomeric polyvinyl chloride with a 0.012-inch thick 300 series stainless steel shear ring, shall be specifically sized to fit the outer diameter of the pipes being joined, and shall have stainless steel take-up clamps to fit the appropriate outer diameter of the coupling. The take-up clamps shall be tightened to the manufacturers recommended torque value and the joints tested in accordance with Section 160.00, and the manufacturer's recommendations. Testing may be waived at the discretion of the approving authority, provided that the installation passes visual inspection. After the connection has been inspected, tested where required, and approved by the approving authority, the entire connection shall be encased in granular fill to a minimum of 6 inches all around.

150.00 BACKFILL

Where the inner edge of the trench is within 2 feet of the edge of the pavement, curb, gutter, curb and gutter, stabilized shoulder or sidewalk, the sewer trench must be backfilled with CLSM (controlled low strength material) meeting the approving authority's specifications, or granular trench backfill, placed in uniform layers not exceeding 6 inches thick (loose measure) and compacted to 95% of Standard Proctor unless flowable fill is used, in which case, the fill shall be designed to have a compressive strength between 100 to 200 psi. Backfill requirements shall conform to agency with jurisdiction over right-of-way or easement where sewer is installed.

Jetting and water-soaking is <u>not</u> allowed.

Outside of the pavement area, native soil may be returned to the trench, in accordance with the requirements of "STANDARD SPECIFICATIONS FOR WATER AND SEWER MAIN CONSTRUCTION IN ILLINOIS", but the developer and/or contractor is responsible for repair of all settlement which occurs.

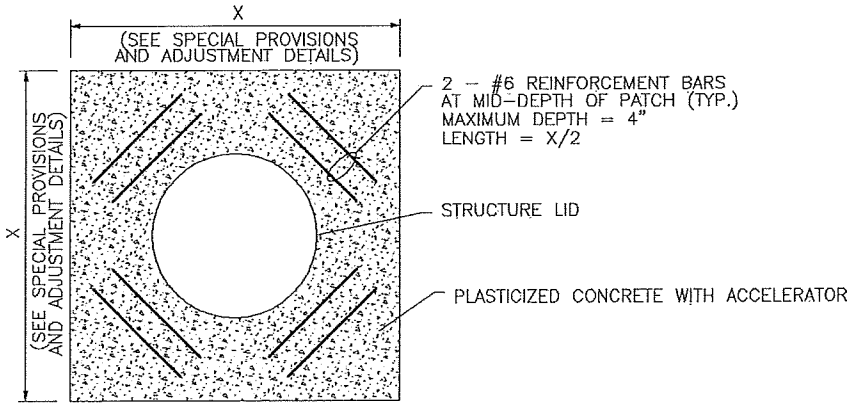

NOTES:

1. THE REINFORCEMENT BARS SHALL NOT BE EPOXY COATED.
2. THE MINIMUM CLEARANCE BETWEEN REINFORCEMENT BARS, CASTINGS, VALVE BOXES, AND PATCH EDGES SHALL BE 3 INCHES.

SEE IDOT STANDARD PCC PAVEMENT ROUNDOUTS 420111-03

* FOR SOME EXISTING MANHOLES, SUBJECT TO APPROVAL BY THE AUTHORITY HAVING JURISDICTION, UP TO 24" OF ADJUSTING RINGS, MAXIMUM 4 RINGS, MAY BE INSTALLED

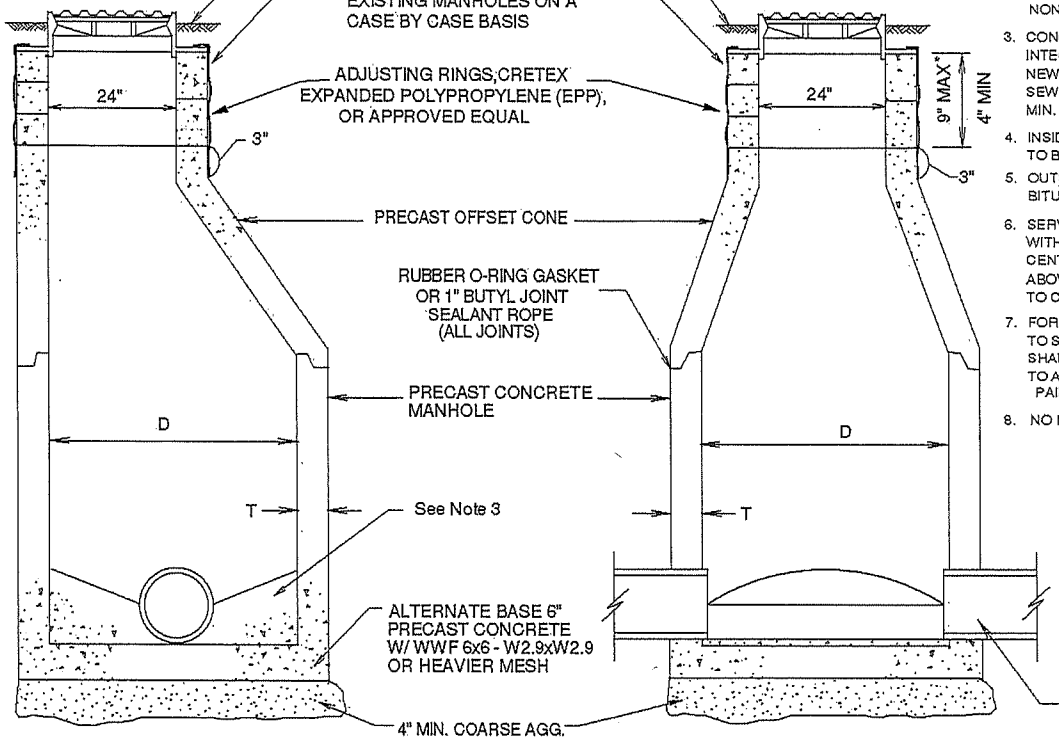

NOTE:

1. CASTING NEENAH R-1713 WITH TYPE B SELF SEALING LID OR EQUAL AND OWNER APPROVED TEXT CAST IN LID. WHERE BOLT DOWN LIDS REQUIRED, CASTING SHALL BE R1916D OR EQUIVALENT.
2. NO ADJUSTING RINGS ARE REQUIRED FOR MANHOLES THAT ARE TO BE BURIED IN AGRICULTURAL AREAS, TURF OR NON-PAVED AREAS.
3. CONCRETE MANHOLE BASE AND FILLET SHALL BE CAST INTEGRALLY WITH BOTTOM MANHOLE SECTION FOR NEW CONSTRUCTION. FOR NEW MANHOLE ON EXISTING SEWERS, A PRECAST, REINFORCED MANHOLE BASE 6" MIN. THICKNESS MAY BE USED.
4. INSIDE AND OUTSIDE OF ALL JOINTS AND PIPE OPENINGS TO BE FILLED WITH MORTAR & BRUSHED SMOOTH.
5. OUTSIDE OF ALL JOINTS TO BE SEALED WITH BITUMINOUS MATERIAL.
6. SERVICE SEWER SHALL BE ANGLED IN DIRECTION OF FLOW, WITH INVERT OF SERVICE SEWER SET BETWEEN CENTER OF MAIN SEWER AND NOT MORE THAN TWO FEET ABOVE CENTER OF MAIN SEWER AND CHANNELED DOWN TO CENTER OF MAIN SEWER.
7. FOR MANHOLES CONSTRUCTED ON NEW SEWERS INTENDED TO SERVE FUTURE DEVELOPMENT, A WOOD LEADER (4 IN X 4 IN) SHALL BE INSTALLED ADJACENT TO THE MANHOLE AND BROUGHT TO A POINT 3 FT ABOVE THE FINISHED GRADE SURFACE AND PAINTED GREEN.
8. NO MANHOLE STEPS.

ALL OPENINGS FOR INLET AND OUTLET PIPES SHALL BE PRECAST WITH THE BOTTOM MANHOLE SECTION. SAID OPENING SHALL CONTAIN FLEXIBLE BOOTS WHICH ARE COMPATIBLE WITH THE SIZE AND TYPE OF SEWER PIPE USED.
CORE-N-SEAL OR EQUIVALENT.

DIAMETER OF MAIN SEWER	D	T
18" AND UNDER	4'-0"	4" Min.
21" TO 42" INCLUSIVE	5'-0"	5" Min.

SANITARY SEWER MANHOLE DETAIL

ALL DEVIATIONS FROM THE DETALS SHOWN ON PAGE 1 OR PAGE 2 MUST BE APPROVED BY THE AUTHORITY HAVING JURISDICTION.

FOR ALL SANITARY MANHOLES WITHIN THE URBANA & CHAMPAIGN SANITARY DISTRICT

REVISION DATE MAY 2016